< 1-12-1-1-2_xx_ANT > RDK

Rev_0.3

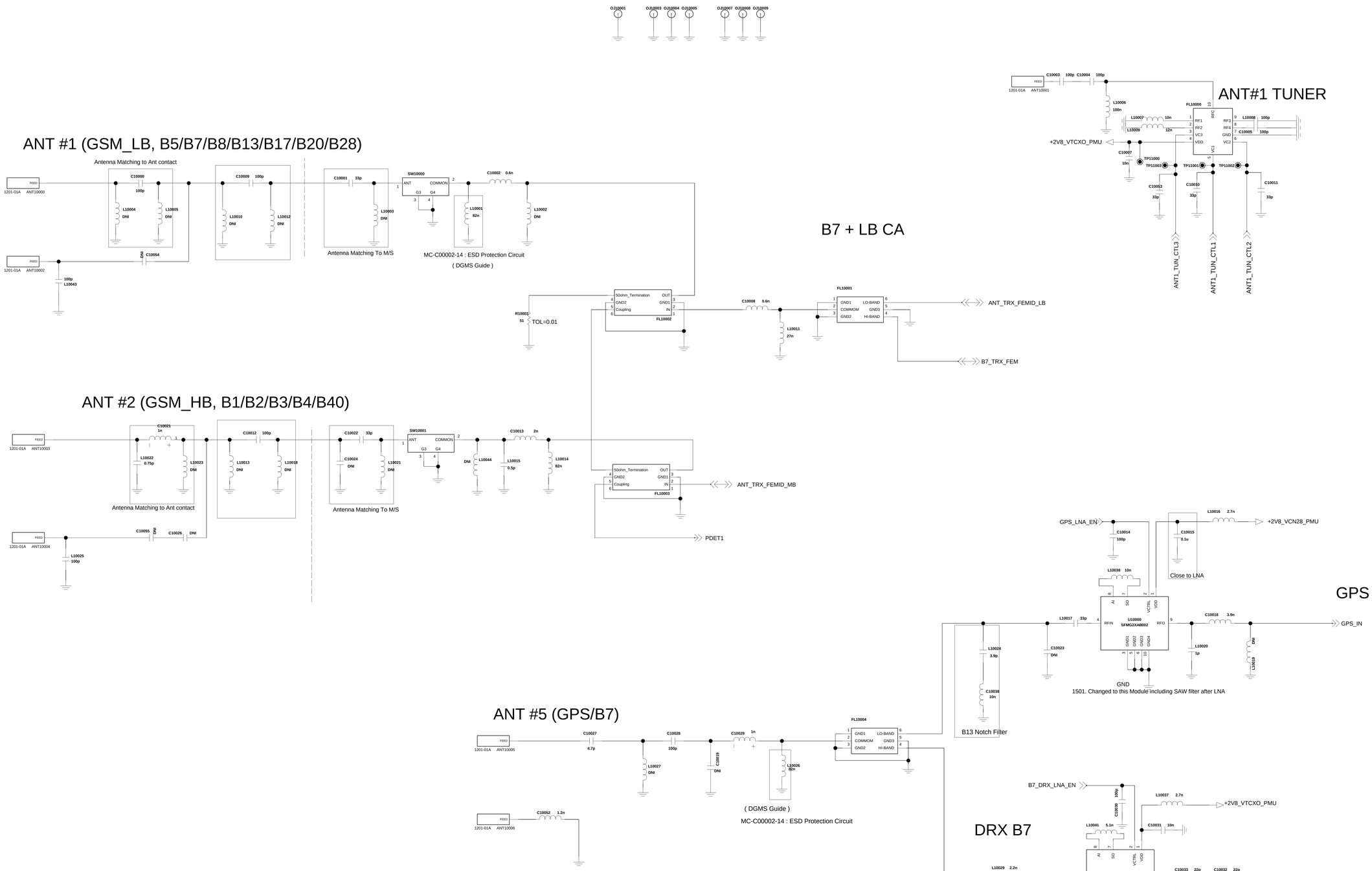

LGE Internal Use Only

LG Electronics	
TITLE	Schematic1
SIZE A2	DWG NO PDM NUMBER
REV Rev	
SHEET 20 of 19	
Drawn by User Name	Date Drawing Date

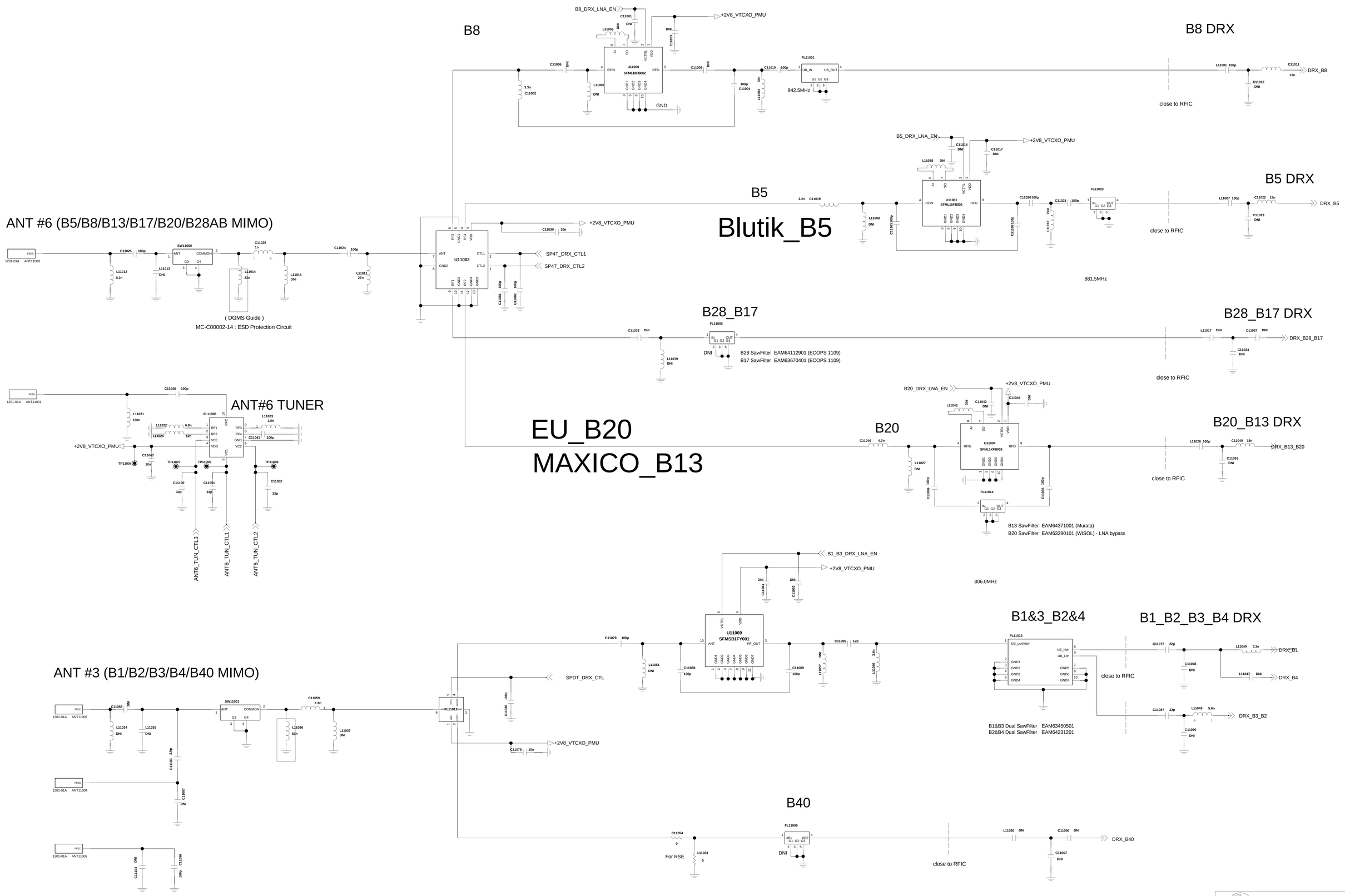

LGE Internal Use Only

uFEMID

º Ï ì Ïçà SAW Front End Module(D5322)
B4/5/8 duplexer EAT63414801
G1800,TX2G LPF

GlobalÇà SAW Front End Module(D5323)
B1/3/5/8 duplexer EAT63375201

FEMID NA P/N : EAT63414801
FEMID EU P/N : EAT63375201

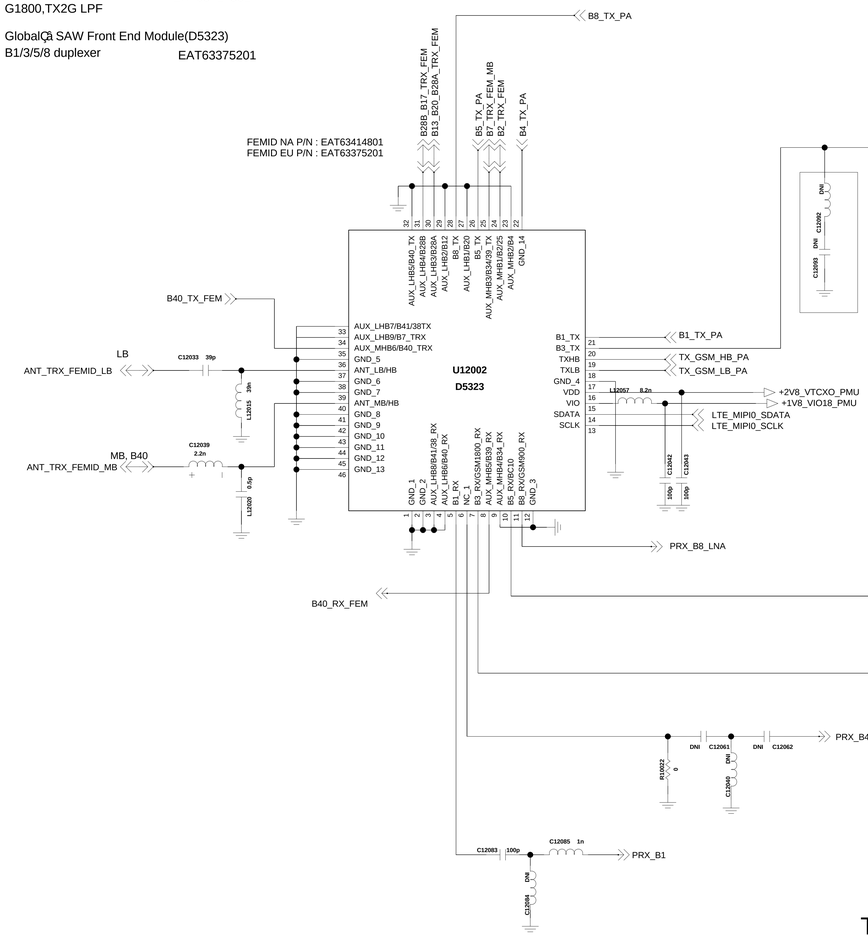

B2 / W1900 / GSM1900

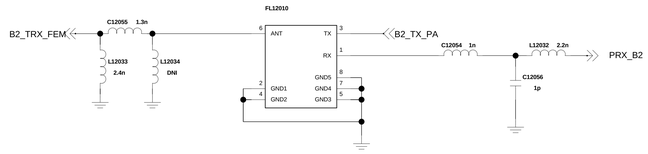

B28B / B17

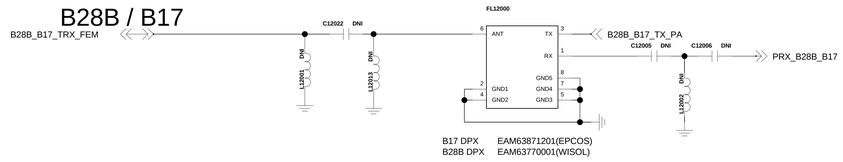

B13 / B20 / B28A

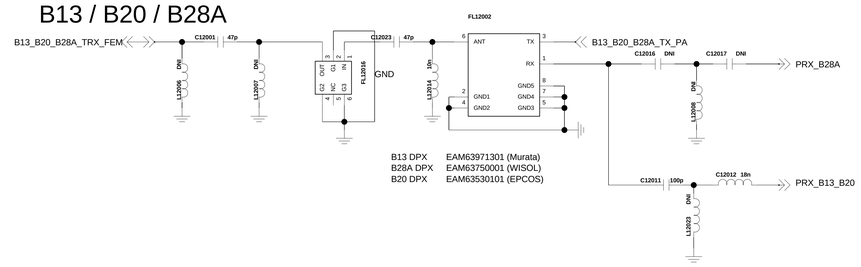

B8, G900 RX

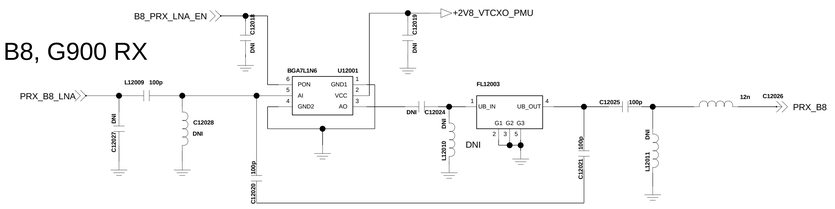

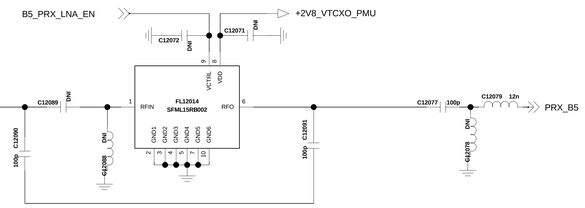

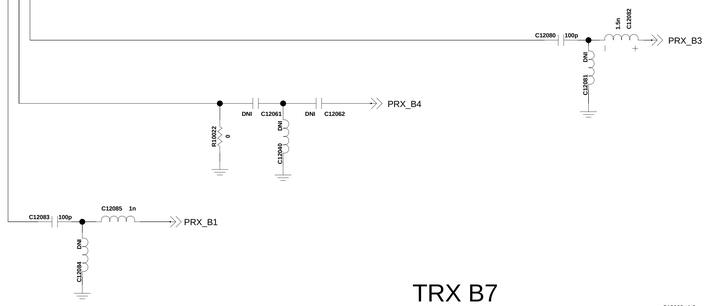

TRX B7

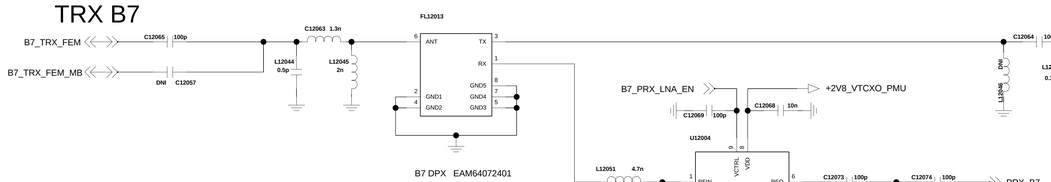

B40 RX

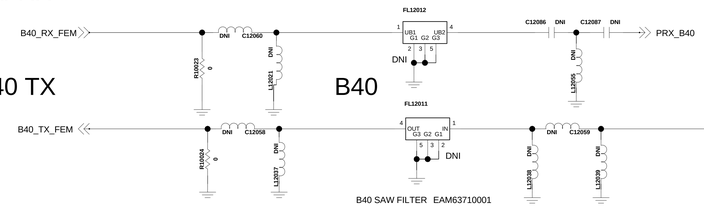

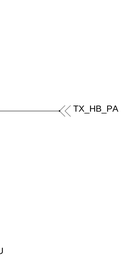

LG Electronics

TITLE: Schematic1

SIZE	DWG NO	REV
A2	PDM NUMBER	Rev

DRAWN BY: User Name | SHEET 24 of 19 | Date: Drawing Date

LGE Internal Use Only

MMPA2.0

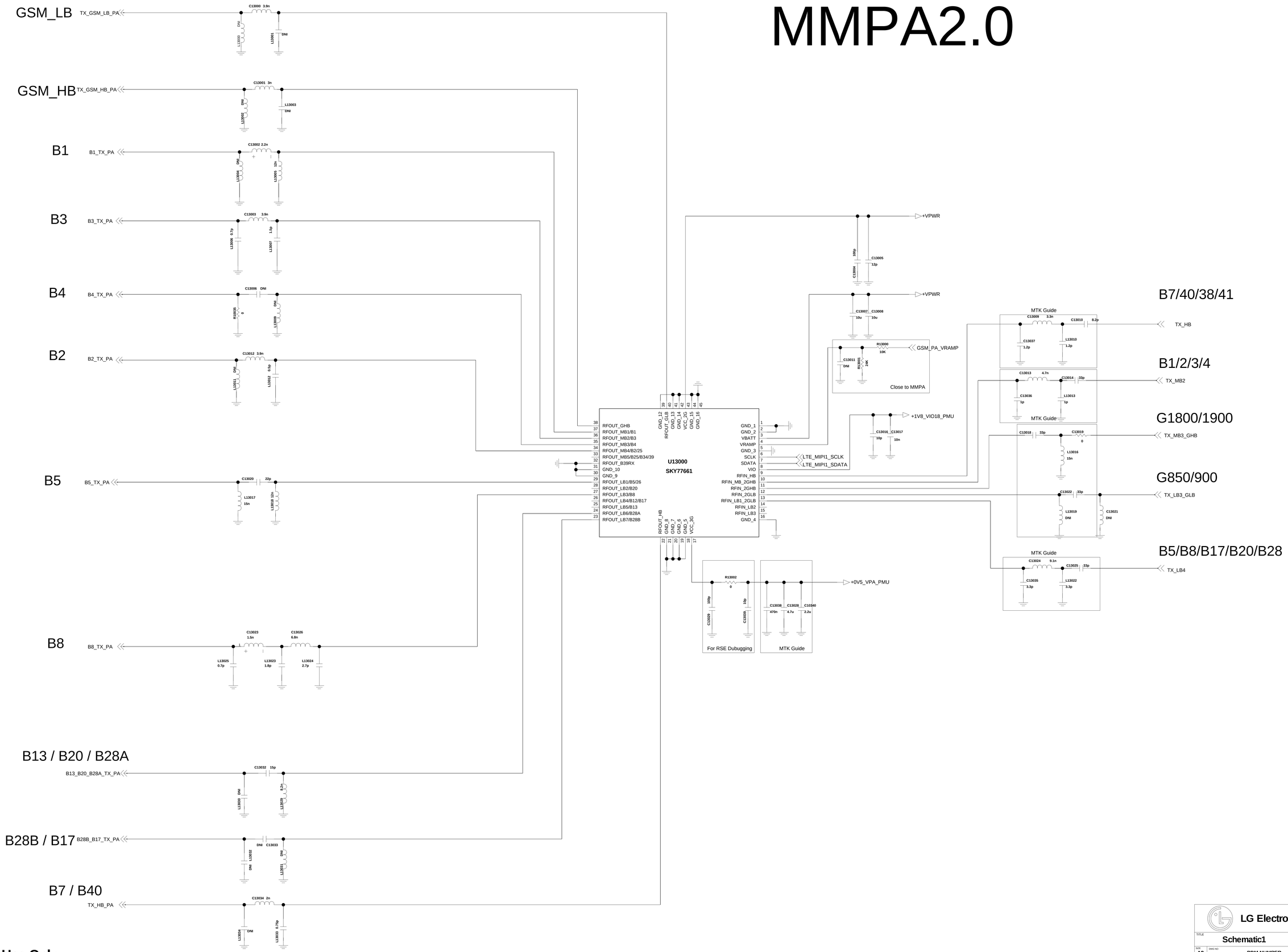

LGE Internal Use Only

LG Electronics

TITLE: Schematic1

SIZE	DWG NO	REV
A2	PDM NUMBER	Rev

Drawn by: User Name | SHEET 25 OF 20 | Date: Drawing Date

< 1-X MT6176 RFIC > RDK

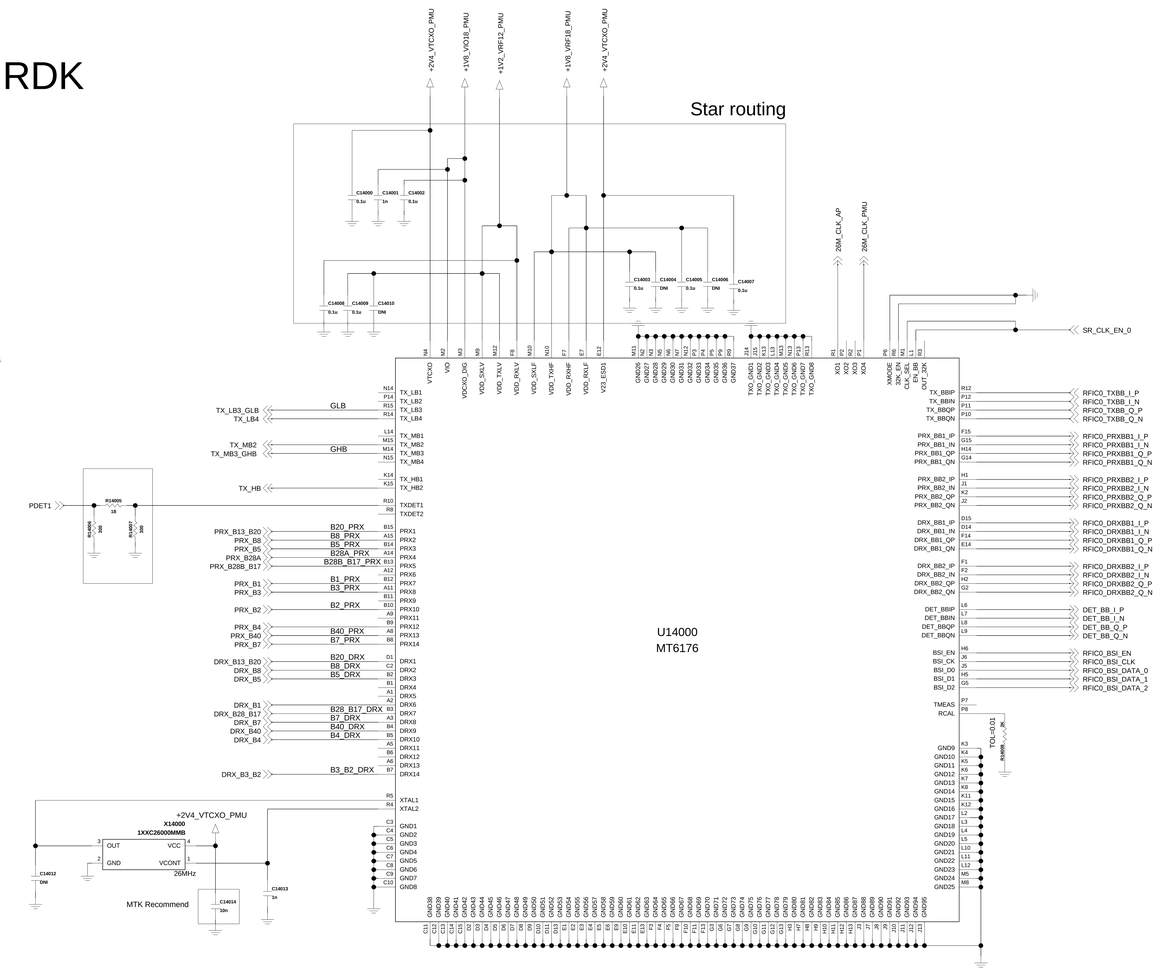

H1,H2 : 7,30,38,40,41
M1,M2,M3,M4 : 1,2,3,4,9,10,11,21,23,24,25,33,34,35,36,37,39/BC 6,1(14),15,4
L1,L2,L3,L4 : 5,6,8,12,13,14,17,18,19,20,16,27,28,44/BC0,10
M3,L3 : 2G : 2,3,5,8

H1,H2 : 2300MHz-2690Mhz
M1,M2,M3,M4 : 1427MHz-2025Mhz
L1,L2,L3,L4 : 699MHz-915Mhz

HB : 7,30,38,40,41
MB : 1,2,3,4,9,10,11,21,23,24,25,33,34,35,36,37,39/BC 6,1(14),15,4
LB : 5,6,8,12,13,14,17,18,19,20,16,27,28,44/BC0,10

PRX14,13,12 : HB,MB 1475MHz-2690Mhz
PRX11,10,9,8 : HB,MB 1475MHz-2690Mhz
PRX7,6,5,4 : MB,LB 709MHz-2170Mhz
PRX3,2,1 : LB 703MHz-960Mhz

LGE Internal Use Only

LG Electronics

Schematic1

SIZE	DWG NO	REV
A2	PDM NUMBER	Rev

DRAWN BY User Name | SHEET 2-1 MT6793DAT4 | DATE Drawing Date

<5-1-1-18_MT6625L_WiFi_BT_GPS_FM>

Rev_0.3

ANT (BT, WiFi)

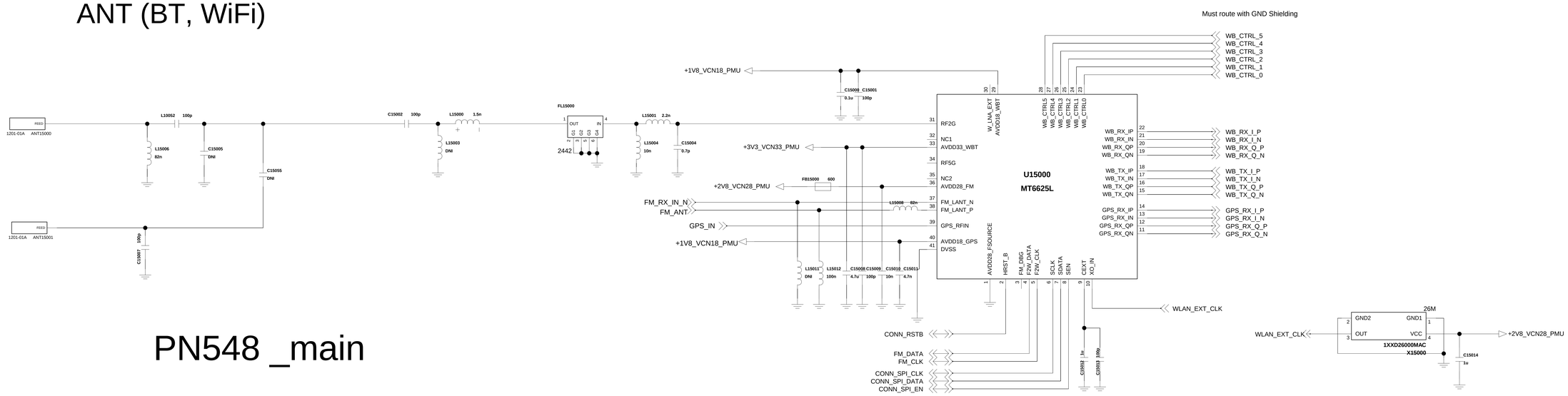

PN548 _main

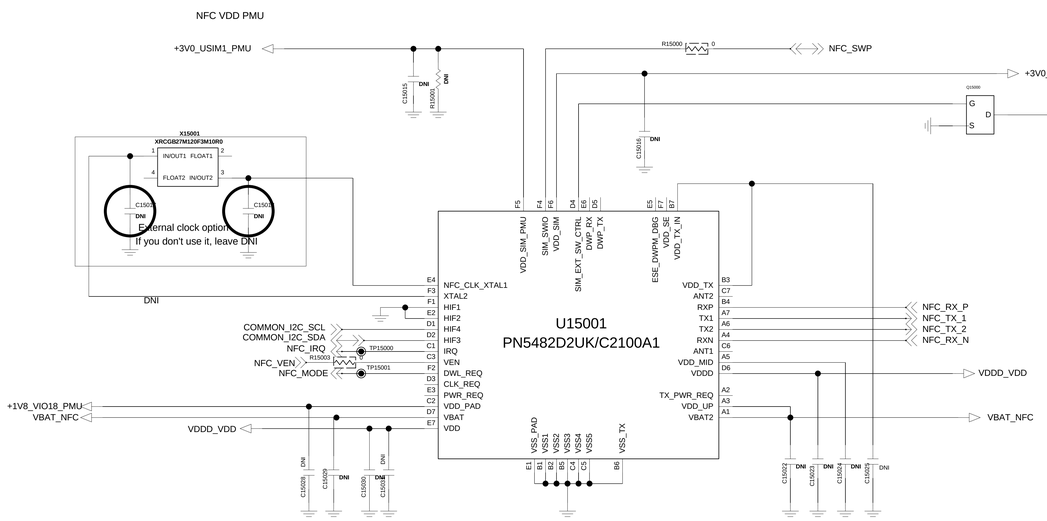

TDMB_1SEG Swap circuit

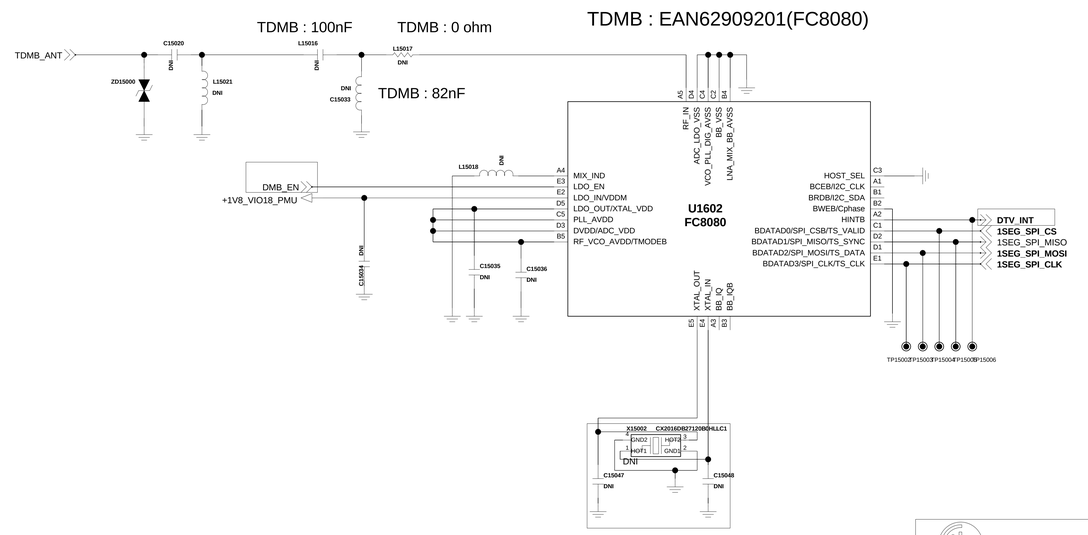

NFC Antenna

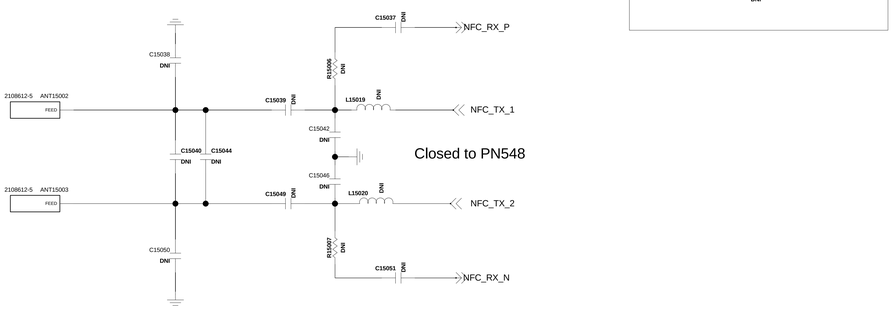

LGE Internal Use Only

LG Electronics	
TITLE	Schematic1
SIZE A2	DWG NO PDM NUMBER
REV Rev	
DRAWN BY User Name	SHEET 26 of 19
Date Drawing Date	

< 2-1_MT6750_DATA >

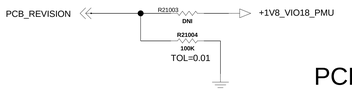

PCB_Revision

0	100K	20K	0.300
0_1	100K	27K	0.383
A	100K	39K	0.505
B	100K	51K	0.608
C	100K	75K	0.771
D	100K	100K	
E	100K	DNI	
1	DNI	100K	QPPS
1.1	100K	200K	

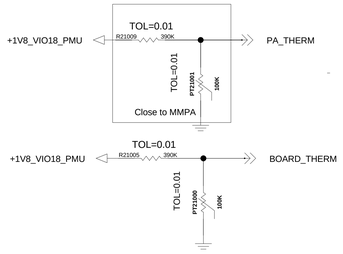

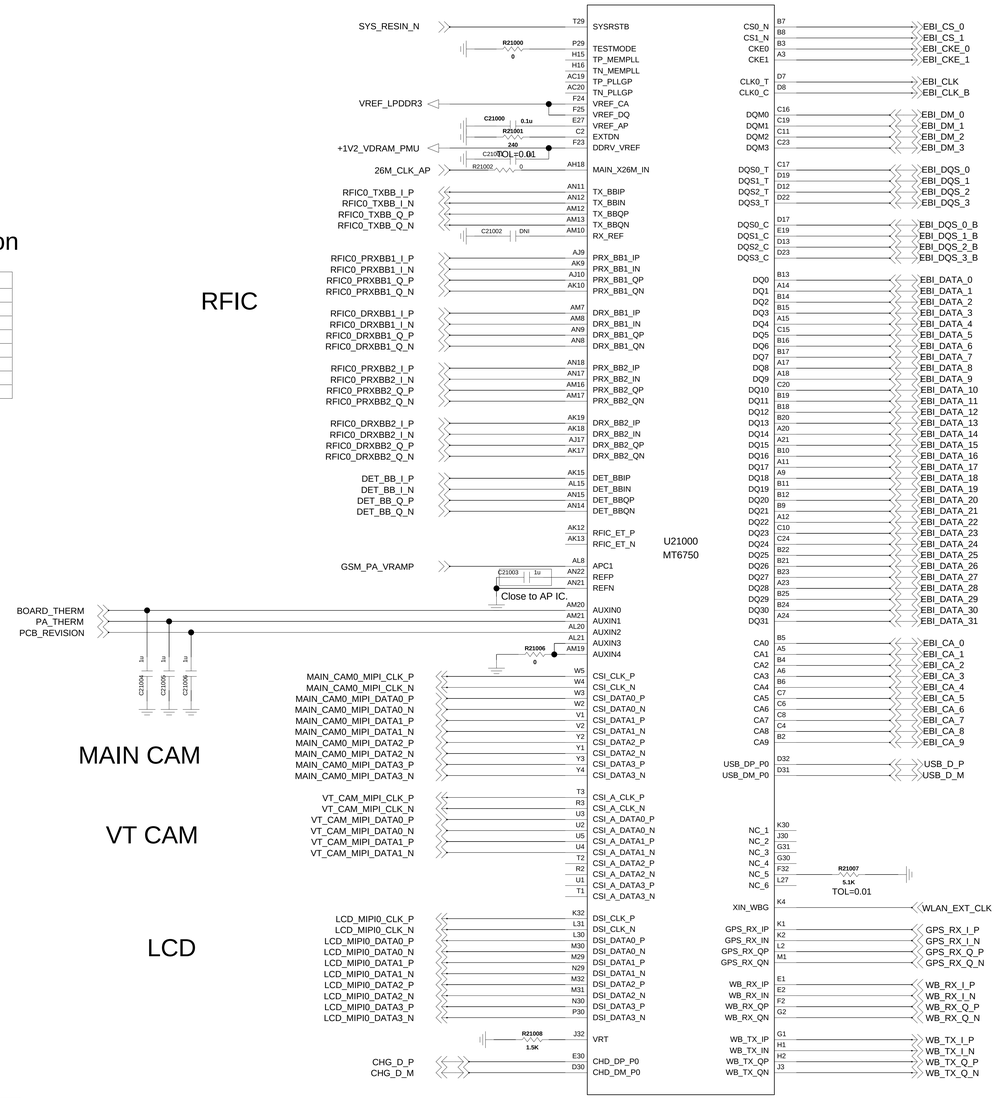

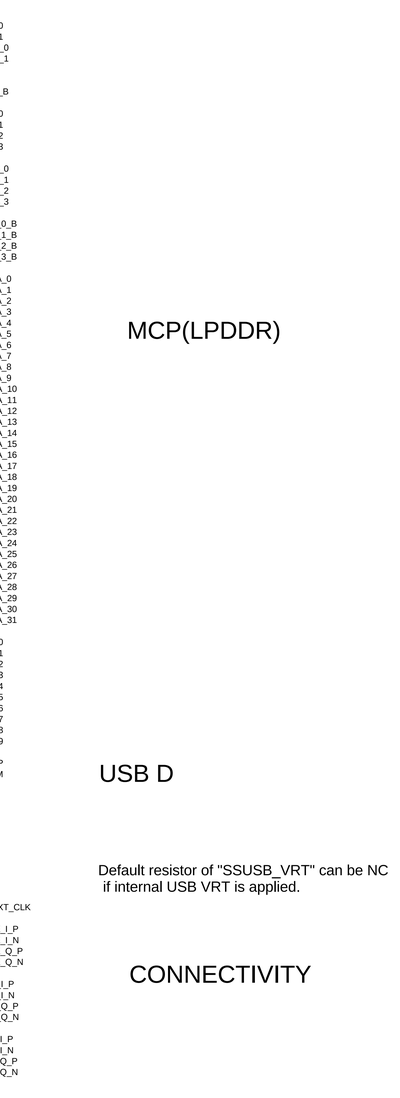

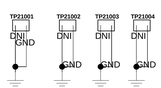

SUS Plate

LGE Internal Use Only

LG Electronics

TITLE: Schematic1		
SIZE: A2	DWG NO: PDM NUMBER	REV: Rev
DRAWN BY: User Name	SHEET: 2-1_MT6750_DATA	Date: Drawing Date

< 2-1_MT6750_GPIO >

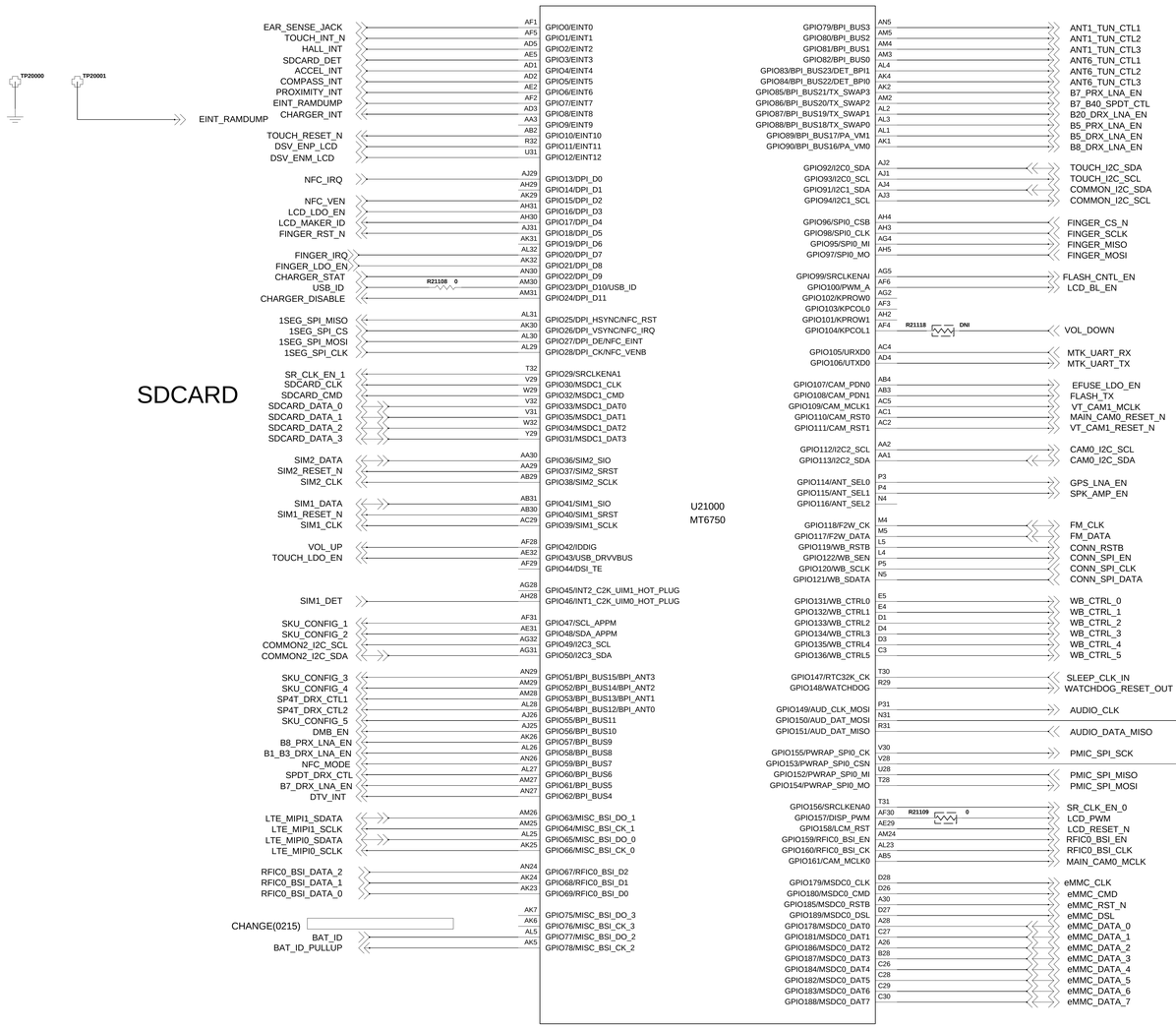

NOTE > PWRAP_SPI0_CSN and AUD_DAT_MOSI are JTAG feature in bootstrap.

eMMC

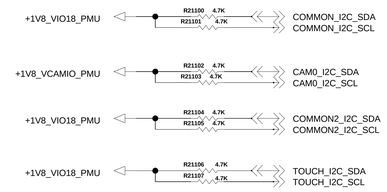

COMMON_I2C : SENSORS , SW CHarger

CAM0_I2C : MAIN / VT CAMERA

COMMON2_I2C : DSV

TOUCH_I2C : TOUCH

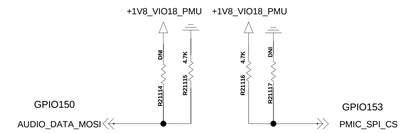

AUDIO_DATA_MOSI	PWRAP_SPI_CS	
LO	HI	N/A
HI	HI	SPI
LO	LO	CAM
HI	LO	MSDC

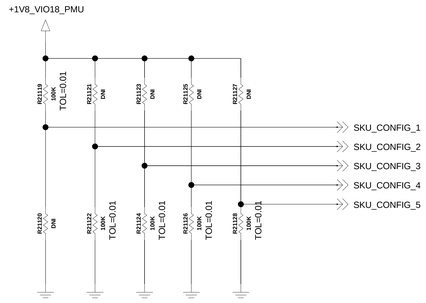

Model	Band	NFC	SIM	GPIO_SUM	GPIO_55	GPIO_52	GPIO_51	GPIO_48	GPIO_47
M250N	1/3/7/8/20	O	SINGLE	0	0	0	0	0	0
M250	1/3/7/8/20	X	DUAL	1	0	0	0	0	1
M250E	1/3/5/7/8/20	X	DUAL	2	0	0	0	1	0
M250ds	3/7/28	X	DUAL	4	0	0	1	0	0
M250YK	1/3/5/7/8/28	X	SINGLE	5	0	0	1	0	1
M250K	1/3/5/7/8/28/40	X	DUAL	7	0	0	1	1	1
M250F	2/4/5/7/28	X	SINGLE	8	0	1	0	0	0
M250AR	2/4/5/7/28	X	SINGLE	9	0	1	0	0	1
M250H	2/4/5/7/13/17	X	SINGLE	10	0	1	0	1	0
M250I	1/3/5/8/40	X	DUAL	11	0	1	0	1	1
M250dsn	1/3/7/8/40	O	DUAL	12	0	1	1	0	0
K-M121 L	1/3/7/8/17	O	SINGLE	13	0	1	1	0	0
K-M121 S	1/3/7/8/17	O	SINGLE	14	0	1	1	0	0
K-M121 K	1/3/7/8/17	O	SINGLE	15	0	1	1	0	0
M250Y	1/3/5/7/8	X	SINGLE	18	1	0	0	1	0

LG Electronics

TITLE: Schematic1

SIZE: A2 | DWG NO: PDM NUMBER | REV: Rev

DRAWN BY: User Name | SHEET 25 OF 19 | Date: Drawing Date

LGE Internal Use Only

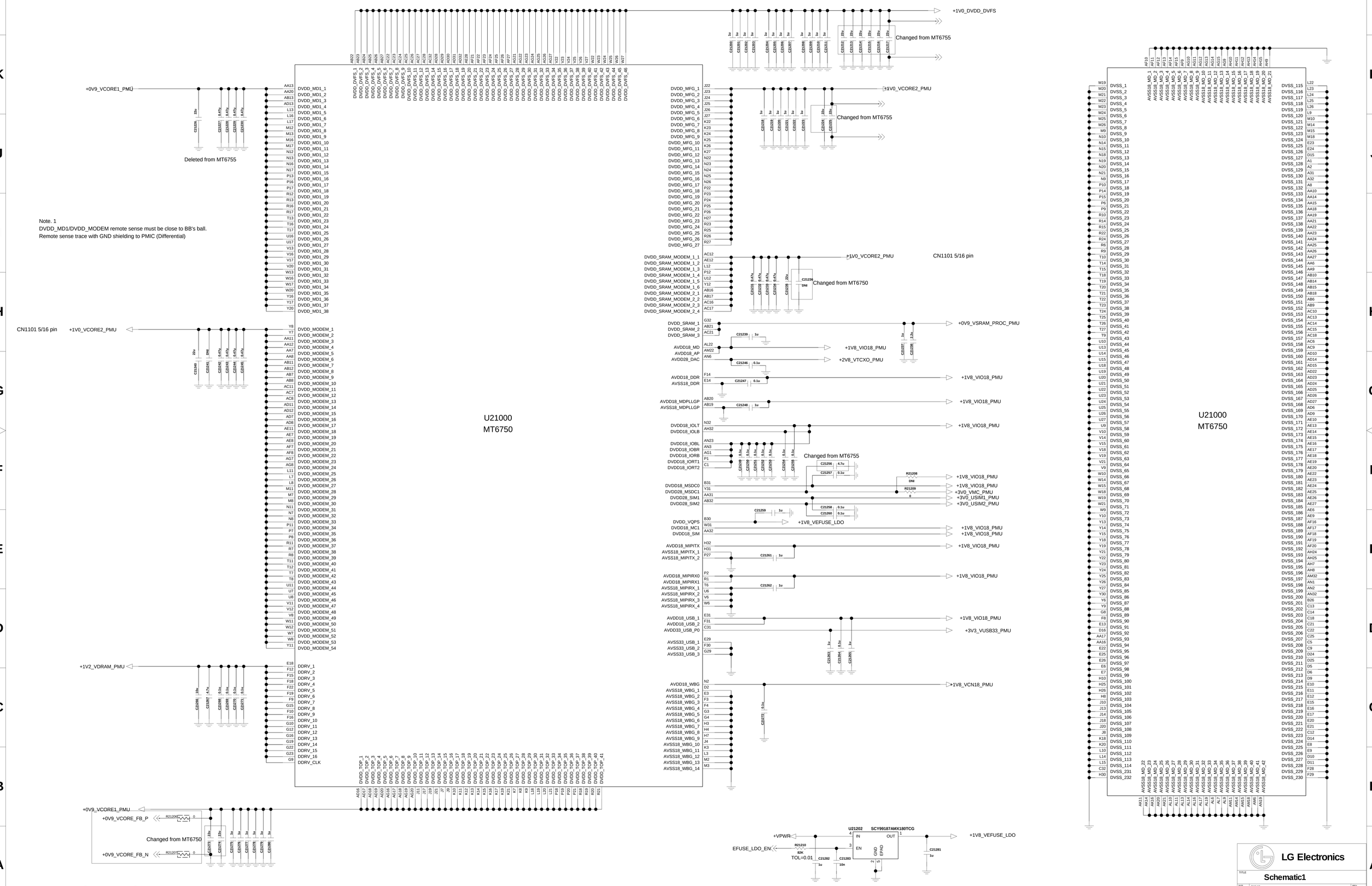

LGE Internal Use Only

LG Electronics

Schematic1

A2 | PDM NUMBER | Rev

User Name | 2-1_MT6750_POWER_GND | Drawing Date

103

< MCP_eMMC_5_0_16Gb_DDR3_16GB_eMMC Hynix >

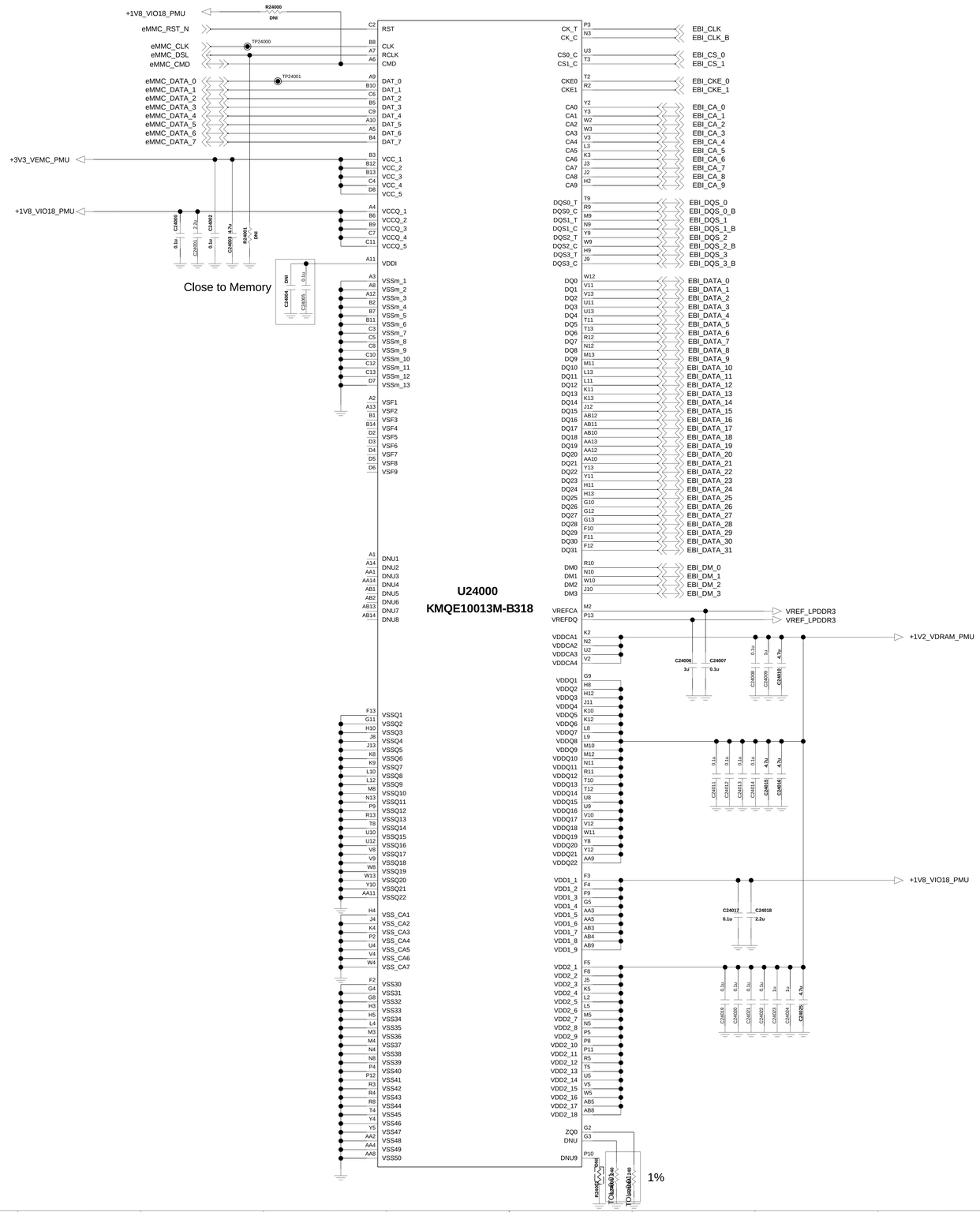

LGE Internal Use Only

LG Electronics	
TITLE	Schematic1
SIZE A2	DWG NO PDM NUMBER
REV Rev	
SHEET 3-3_MCP_eMMC_5_0_16Gb_DDR3_16GB_HYNIX	
DRAWN BY User Name	

<4-1-15-1_PMIC_MT6353_DATA >

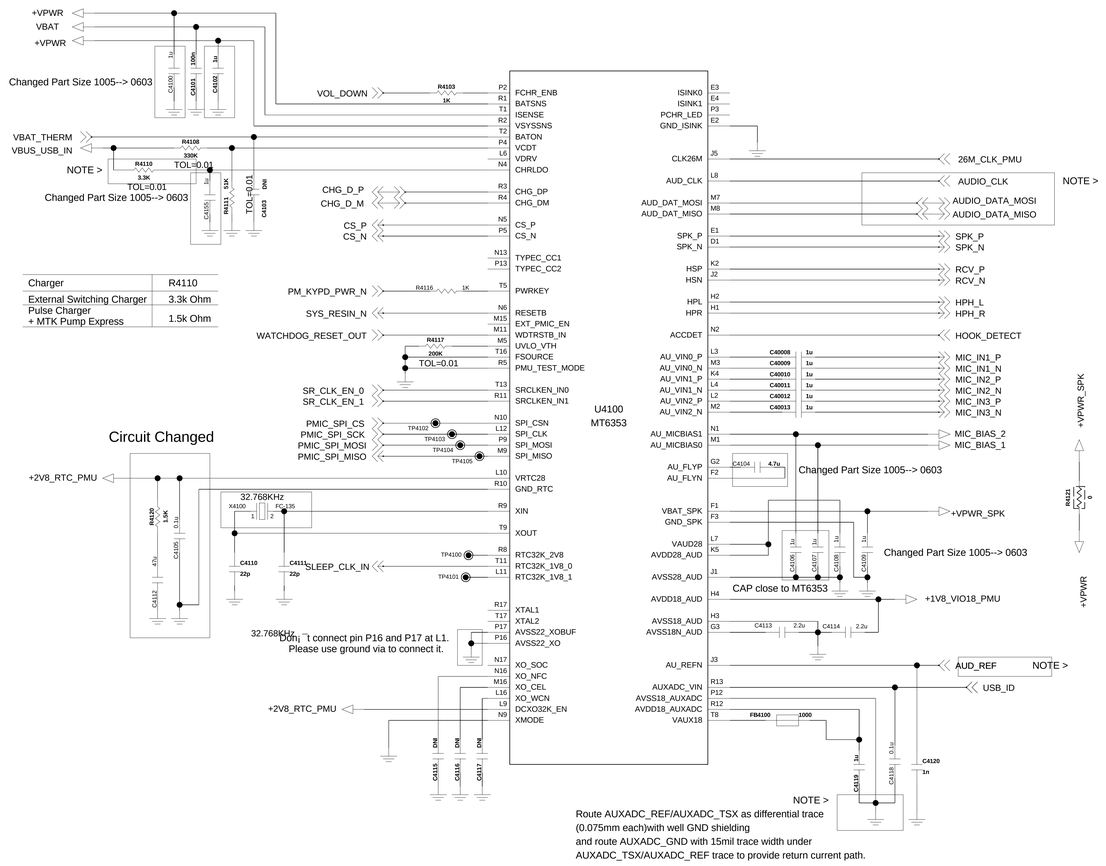

Charger	R4110
External Switching Charger	3.3k Ohm
Pulse Charger + MTK Pump Express	1.5k Ohm

<4-1-15-1_PMIC_MT6353_POWER > Rev_0.1

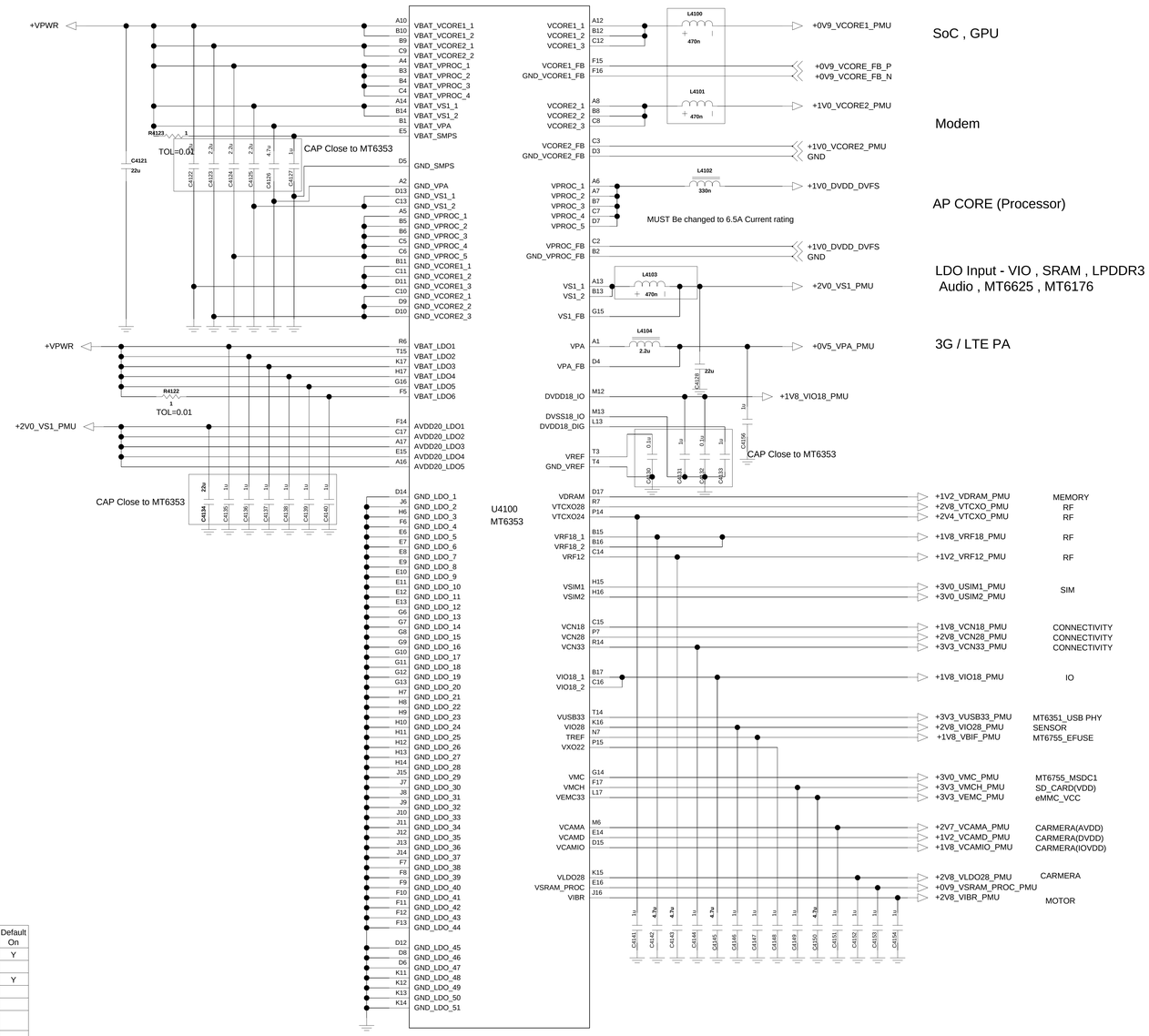

BUCK & LDO

Function	Default Voltage	Vout	Voltage Step [mV]	Rated Current	Default On
VCORE1	0.9V	0.600 - 1.310 V	6.25	3,000mA	Y
VCORE2	1.0V	0.600 - 1.310 V	6.25	3,500mA	Y
VPROC	1.0V	0.600 - 1.310 V	6.25	5,000mA	Y
VS1	2.0V	1.950 - 2.200 V	12.5	1,900mA	Y
VPA	0.5V	0.500 - 3.400 V	50	800mA	N

Function	Type	Input Power Domain	Default Voltage	Vout	Rated Current	Default On
VDRAM	SLDO	AVDD20_LDO1	1.24 V	1.24 V	1,000mA	Y
VTCXO28	ALDO	VBAT_LDOS1	2.8 V	2.8 V	40mA	
VTCXO24	ALDO	VBAT_LDOS2	2.375 V	2.375 V	40mA	Y
VRF18	SLDO	AVDD20_LDO5	1.825 V	1.825 V	400mA	
VRF12	SLDO	AVDD20_LDO5	1.2 V	1.2 V	150mA	
VSIM1	DLDO	VBAT_LDO4	1.8 V	1.7 / 1.8 / 1.86 / 2.76 / 3.0 / 3.1 V	50mA	
VSIM2	DLDO	VBAT_LDO4	1.8 V	1.7 / 1.8 / 1.86 / 2.76 / 3.0 / 3.1 V	50mA	
VCN18	SLDO	AVDD20_LDO2	1.8 V	1.8 V	150mA	
VCN28	ALDO	VBAT_LDO1	2.8 V	2.8 V	40mA	
VCN33	DLDO	VBAT_LDO2	3.3 V	3.3 / 3.4 / 3.5 / 3.6 V	350mA	
VIO18	SLDO	AVDD20_LDO3	1.8 V	1.8 V	600mA	Y
VUSB33	DLDO	VBAT_LDO2	3.3 V	3.3 V	50mA	Y
VIO28	DLDO	VBAT_LDO4	2.8 V	2.8 V	200mA	Y
VREF	Power Switch	VBAT_LDO1	1.8 V	1.8 V	1mA	
VXO22	ALDO	VBAT_LDOS2	2.2 V	2.2 V	20mA	Y
VMC	DLDO	VBAT_LDO5	3.0 V	1.8 / 2.9 / 3.0 / 3.3 V	200mA	
VMCH	DLDO	VBAT_LDO5	3.0 V	2.9 / 3.0 / 3.3 V	800mA	
VEMC33	DLDO	VBAT_LDO3	3.0 V	2.9 / 3.0 / 3.3 V	800mA	Y
VCAMA	ALDO	VBAT_LDO1	2.8 V	2.5 / 2.8 V	200mA	
VCAMD	SLDO	AVDD20_LDO2	1.3 V	0.9 / 1.0 / 1.1 / 1.22 1.3 / 1.5 / 1.8 V	<=1.5V : 500mA 1.8V : 300mA	
VCAMIO	SLDO	AVDD20_LDO2	1.8 V	1.8 V	200mA	
VLDO28	DLDO	VBAT_LDO4	2.8 V	2.8 V	300mA	
VSRAM_PROC	SLDO	AVDD20_LDO4	1.1 V	0.6 - 1.31 V	400mA	Y
VIBR	DLDO	VBAT_LDO4	2.8 V	1.2 / 1.3 / 1.5 / 1.8 2.5 / 2.8 / 3.0 / 3.3 V	100mA	
VAUX18	ALDO	VBAT_LDO1	1.8 V	1.8 V	40mA	Y
VAUD28	ALDO	VBAT_LDO1	2.8 V	2.8 V	40mA	Y
VRTC28	VRTC28	VBAT_LDO1	2.8 V	2.8 V	2mA	Y
VDIG18	DVDD18_DIG	VBAT_LDO2	1.8 V	1.8 V	20mA	Y

LGE Internal Use Only

LG Electronics

TITLE: Schematic1

SIZE	DWG NO	REV
A2	PDM NUMBER	Rev

SHEET 20 of 20 | DRAWN BY: User Name | Date: Drawing Date

< 6-6-1_Earjack >

Analog S/W

Earjack amp-off popup noise

Deleted (VI 6/30)

Deleted with
HPH_AUD_SW
(MT6750 GPIO_19)

	U6602	C6611	C6615	C6612	C6613
TDMB & FM	O	O	X	O	X
Only TDMB	X	O	O	X	X
Only FM	X	X	X	O	O
None	X	X	X	X	X

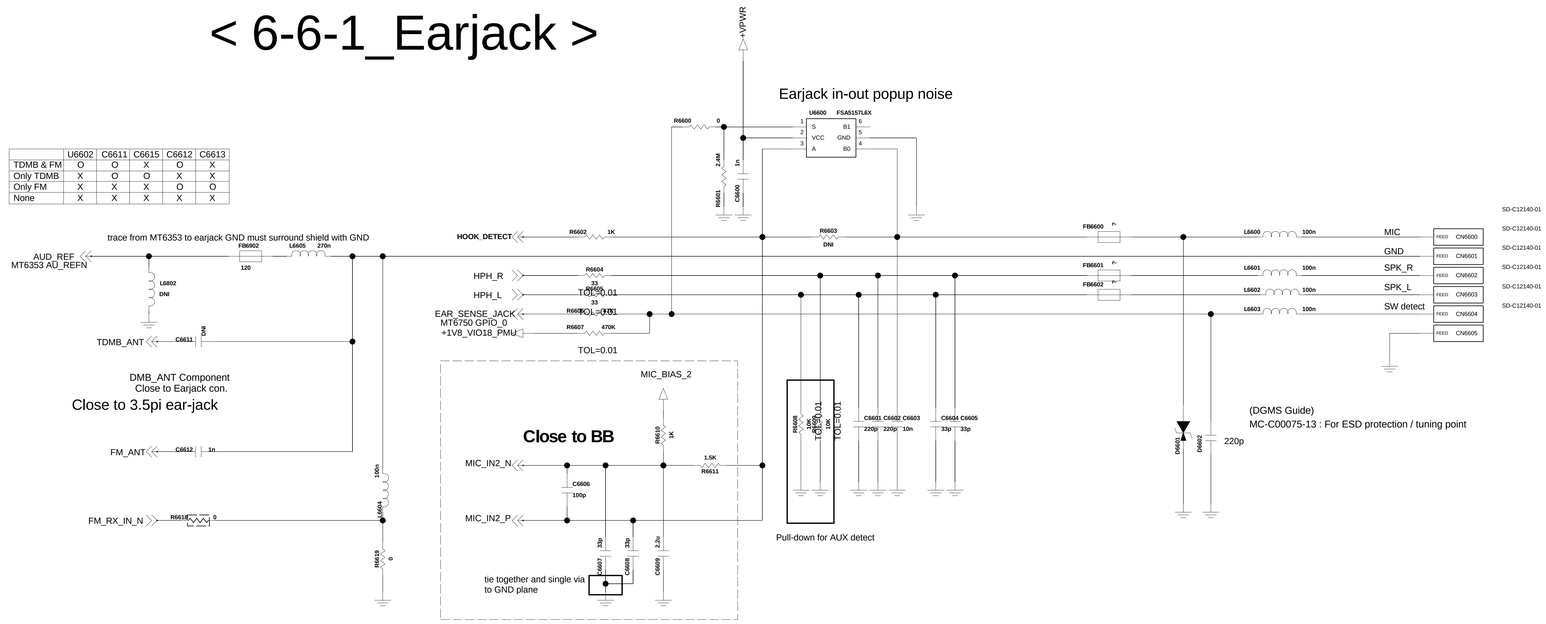

SPK_AMP

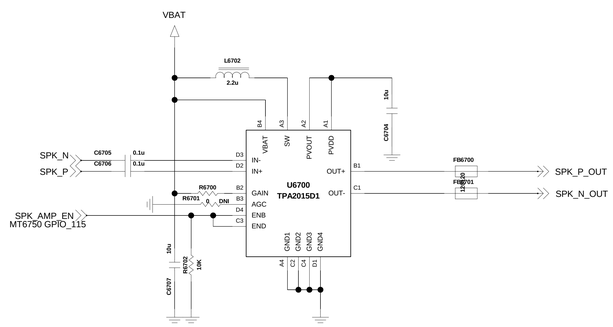

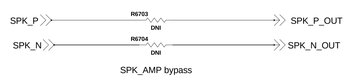

< 6-7-1_Speaker >

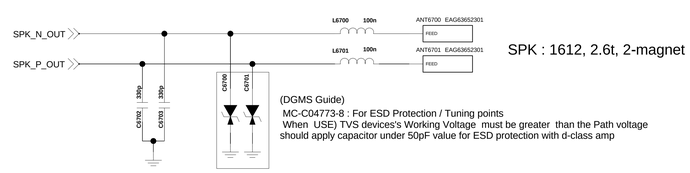

< 6-8-2_Receiver >

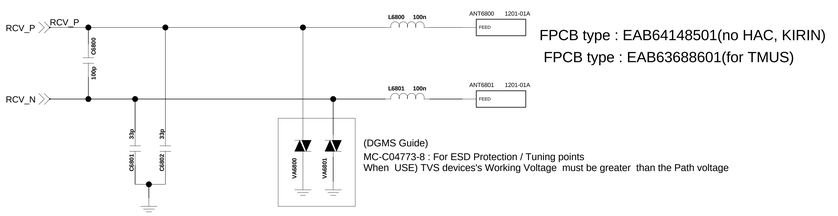

< 6-9-2_2MIC >

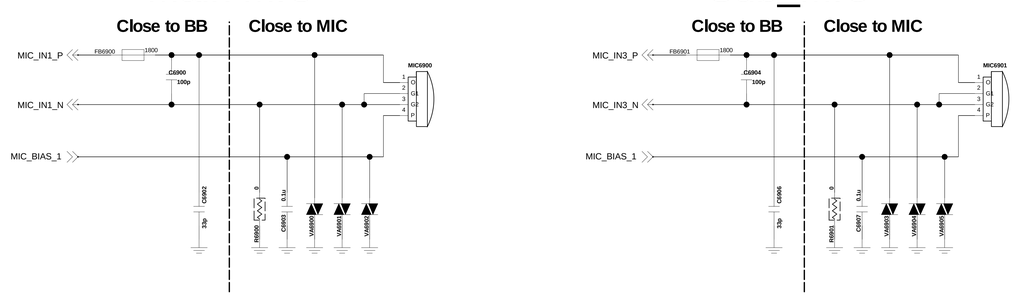

LGE Internal Use Only

LG Electronics

Schematic1

A2 | PDM NUMBER | Rev

6-6_EARJACK | User Name | Drawing Date

< 7-1-X_LCD_LGD_HD >

LGD 5.3 inch HD Incell Hybrid LCD

HD LCD module : EAT63355101

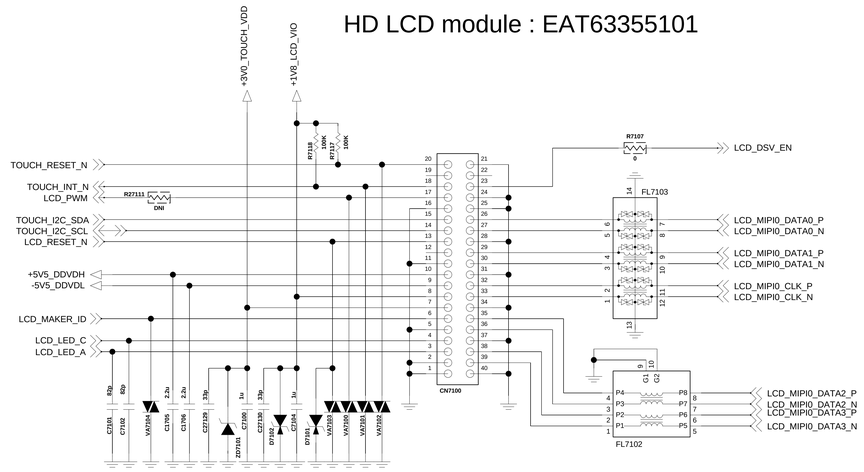

<7-3-5-1_30pin_5M_8M_13M_AF> Rev_0.3

13 Mega Camera module : EBP63001801

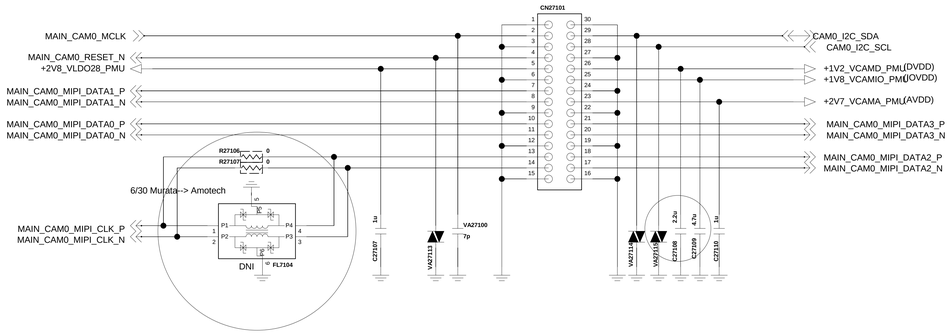

LCD_Backlight_Flash_DSV_LM3632

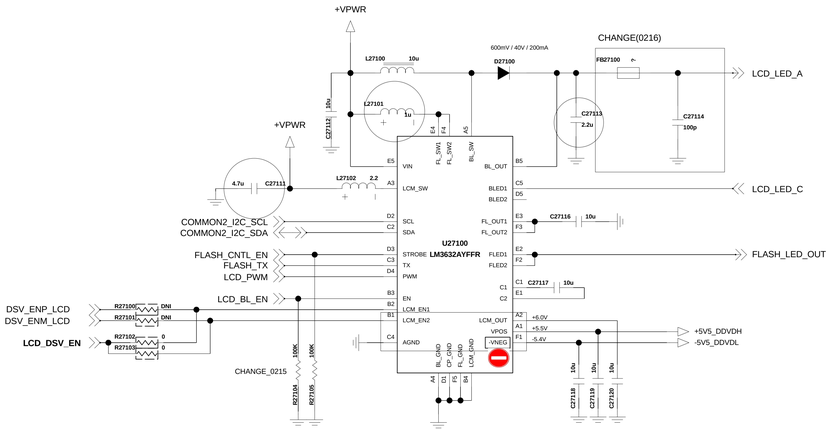

I2C Address : 0000000 or 0000001

<Flash_LED>

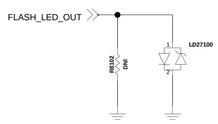

< 7-4-x_Front_Camera_30pin_5M_FF>

[DGMS Guide]

MC-C00081-17: 1. Add ESD Protection curcuit for Camera signal lines

5M_Wide : EBP62982701(LGIT)

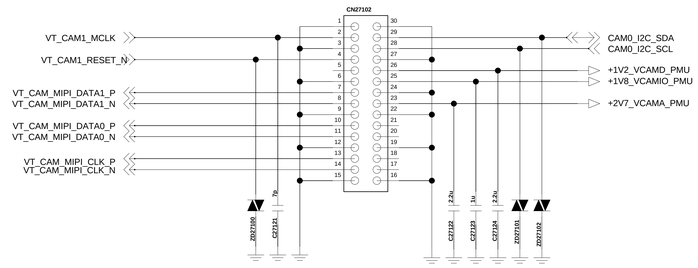

TOUCH LDO

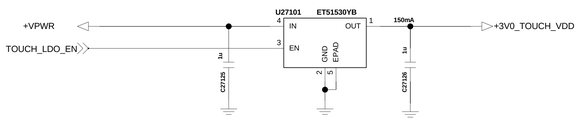

LCD LDO

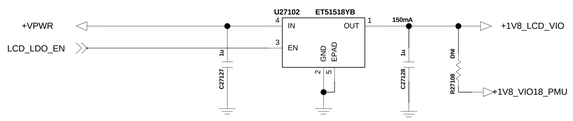

Accel_Compass LSM303B

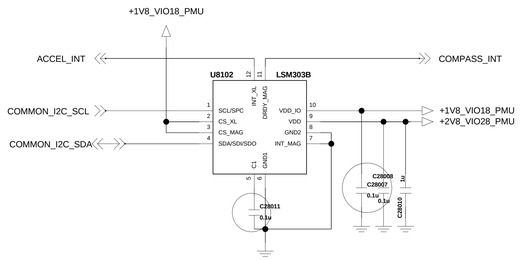

6-AXIS(OPTION DNI)

Proximity_apds9930-130

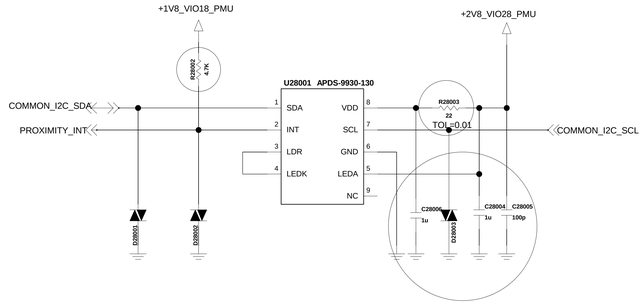

FINGER LDO

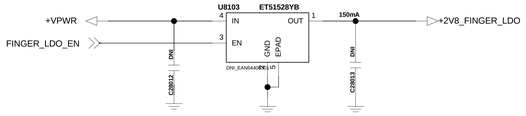

< 8-7-1-5_Hall_IC_S5712>

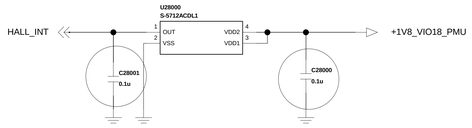

< 9-9-1-1_MOTOR >

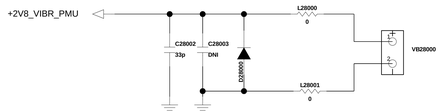

< FINGER KEY >

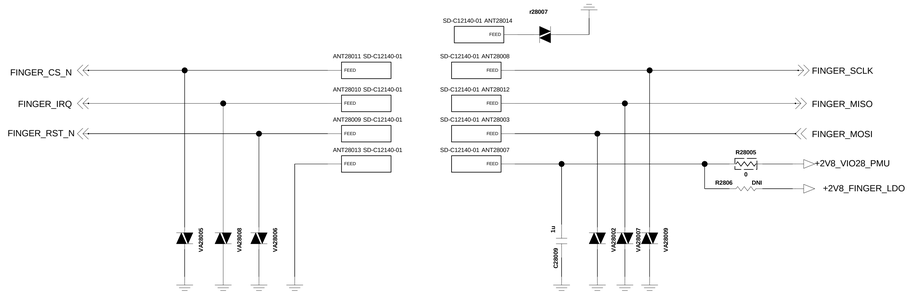

< PWR KEY >

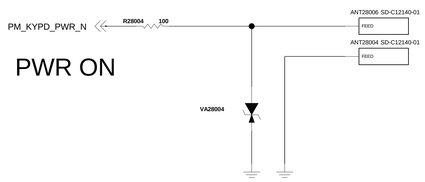

PWR ON

< VOL KEY >

Vol. UP/DOWN

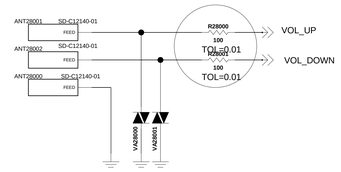

LGE Internal Use Only

LG Electronics

TITLE	Schematic1
SIZE	A2
DWG NO	PDM NUMBER
REV	Rev
DRAWN BY	User Name
SHEET	8_Sensor_VIB_KEY
Date	Drawing Date

<9-1_Battery_Connector_4Pin>

Circuit 1. Batt Conn. /wo EMI Filter

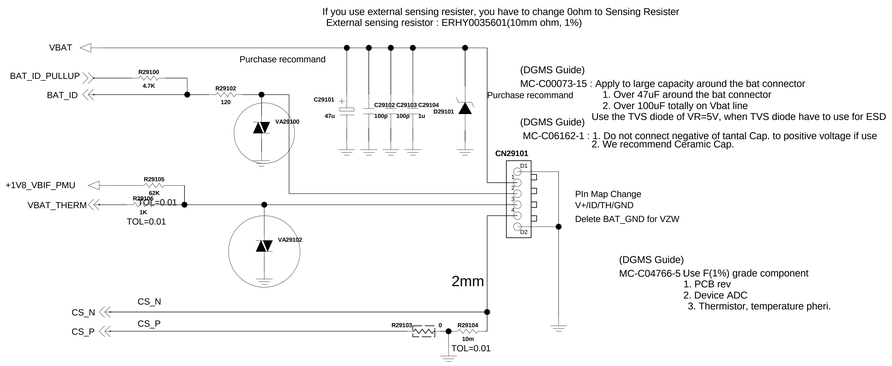

<9-2-1_USB_IO> Rev.1.0

Connector 1. USB 2.0

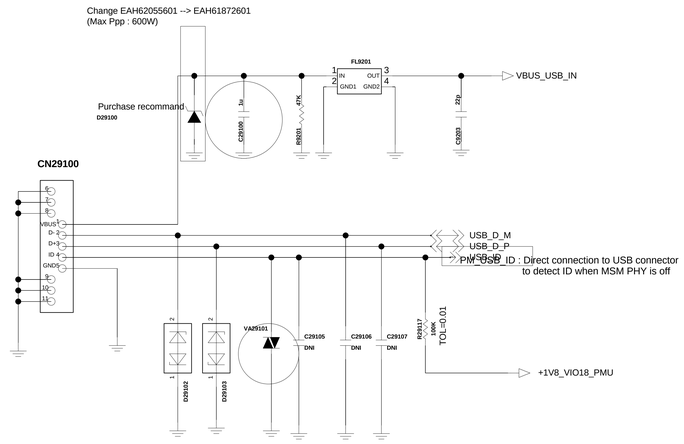

< RT9460_SWITCH CHARGER >

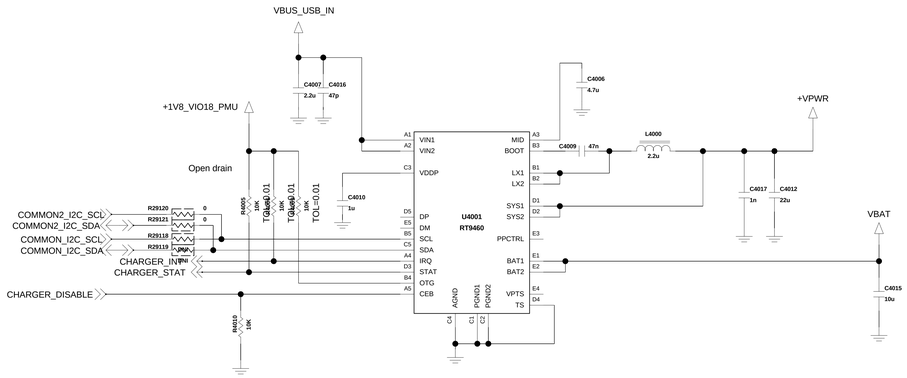

** NOTE4

PSEL High : USB host source Low : adapter source

STAT Low : charge in progress High : complete

OTG : PSEL HIGH & OTG HIGH IIN LIMIT 500mA OTG LOW IIN LIMIT 100mA

ILIM : set the maximum input current limit

--> min 500mA , (1/R)*530 = about 2.2A

LGE Internal Use Only

LG Electronics	
TITLE	MSM8926_X5_VZW
SIZE A2	DWG NO PDM NUMBER
REV Rev	
Drawn by User Name	SHEET 50 OF 38
Date Drawing Date	

< 9-6_u_SDCARD_Socket > Rev.1.1

Circuit 1. u-SDCARD SIM Combo for QMC /w Low Detection

Note 1. +2V95_SD_PULL_UP (1.8 or 2.95V) switches automatically per inserted SD Card version
For example, SD card Version 2.0 = 2.95V, Version 3.0 = 1.8V
Note 2. +2V95_SD_VCC is SD/MMC Power

Caution ! - According to MSM8960, APQ8064 BackPowering issue, +2V95_SD_PULL_UP was Always on during sleep mode.

	SW	VSS(T6)	SD_CARD_DET
Card Detect			
Card Installed			GND
Card Not Installed			1.8V

Added for NFC

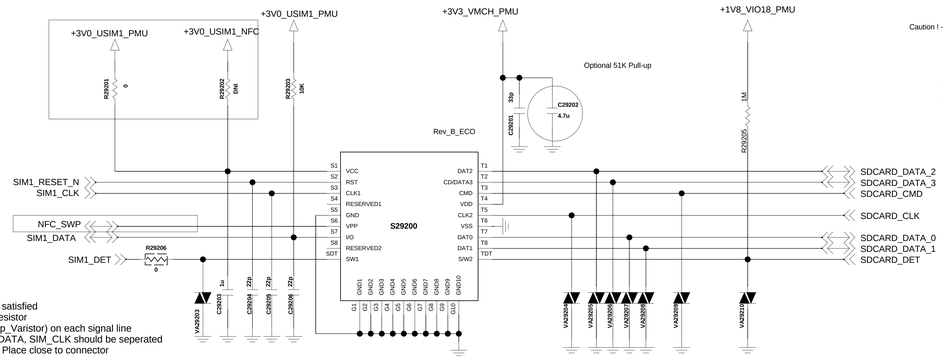

Nano SIM Combo Socket

(DGMS Guide)
MC-C04581-13 : Below items should be satisfied
1. SIM_DATA pull-up resistor
2. Use under 33pF (Cap_Varistor) on each signal line
3. When routing, SIM_DATA, SIM_CLK should be seperated
4. CAP,Varistor should Place close to connector

(DGMS Guide)
MC-C04582-14 : Below items should be satisfied
1. SD_DETECT Pull-up or Pull-down
2. Data/CMD line should be needed Pull-up resistor
(If chipset has internal Pull-up, comment it on circuit)
3. Use under total 10pF Capacitance on each line ; Data [0:3], CMD - Cap. TVS diode, varistor
(on other line, We recommend 10pF capacitance and use under 30pF capacitance)
4. CAP,Varistor should Place close to connector

(DGMS Guide)
MC-C05446-7 : Below items should be satisfied
1. Power of SD card should use independant Power source just like LDO/PMIC which can turn off it.
2. Per chip type which support SD card should manage current capacity.
(In case of High speed mode, SD Card Power should get margin of 200mA)
3. Do not connect serial component to SD card power, voltage drop can arise at Power line.

However, It is possible for MSM8974, MSM8x10 .. to be turned off, so, FET circuit to turn off it is not needed any more.

However, It is possible for MSM8974, MSM8x10 :: to be turned off, so, FET circuit to turn off it is not needed any more.

TOP SHIELD CAN CLIP

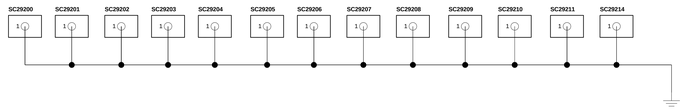

TOP_GND_CONTACT_CLIP

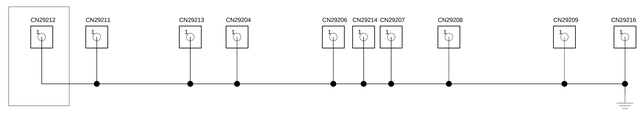

Bottom_Shieldcan2

Single SIM Shield Can : MBK64892905
Dual SIM Shield Can : MBK64892906

Bottom_Shieldcan3

< 9-3-1_JTAG > Rev_0.4

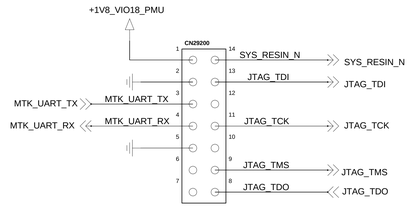

Domestic EU_Global

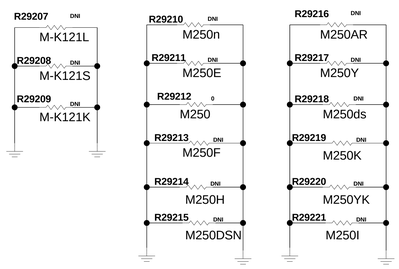

Model Index

	K121L	K121S	K121K	M250n	M250E	M250	M250F	M250H	M250DSN	M250AR	M250Y	M250ds	M250K	M250YK	M250I
R29207	0 Ohm	DNI	DNI	DNI	DNI	DNI	DNI	DNI	DNI	DNI	DNI	DNI	DNI	DNI	DNI
R29208	DNI	0 Ohm	DNI	DNI	DNI	DNI	DNI	DNI	DNI	DNI	DNI	DNI	DNI	DNI	DNI
R29209	DNI	DNI	0 Ohm	DNI	DNI	DNI	DNI	DNI	DNI	DNI	DNI	DNI	DNI	DNI	DNI
R29210	DNI	DNI	DNI	0 Ohm	DNI	DNI	DNI	DNI	DNI	DNI	DNI	DNI	DNI	DNI	DNI
R29211	DNI	DNI	DNI	DNI	0 Ohm	DNI	DNI	DNI	DNI	DNI	DNI	DNI	DNI	DNI	DNI
R29212	DNI	DNI	DNI	DNI	DNI	0 Ohm	DNI	DNI	DNI	DNI	DNI	DNI	DNI	DNI	DNI
R29213	DNI	DNI	DNI	DNI	DNI	DNI	0 Ohm	DNI	DNI	DNI	DNI	DNI	DNI	DNI	DNI
R29214	DNI	DNI	DNI	DNI	DNI	DNI	DNI	0 Ohm	DNI	DNI	DNI	DNI	DNI	DNI	DNI
R29215	DNI	DNI	DNI	DNI	DNI	DNI	DNI	DNI	0 Ohm	DNI	DNI	DNI	DNI	DNI	DNI
R29216	DNI	DNI	DNI	DNI	DNI	DNI	DNI	DNI	DNI	0 Ohm	DNI	DNI	DNI	DNI	DNI
R29217	DNI	DNI	DNI	DNI	DNI	DNI	DNI	DNI	DNI	DNI	0 Ohm	DNI	DNI	DNI	DNI
R29218	DNI	DNI	DNI	DNI	DNI	DNI	DNI	DNI	DNI	DNI	DNI	0 Ohm	DNI	DNI	DNI
R29219	DNI	DNI	DNI	DNI	DNI	DNI	DNI	DNI	DNI	DNI	DNI	DNI	0 Ohm	DNI	DNI
R29220	DNI	DNI	DNI	DNI	DNI	DNI	DNI	DNI	DNI	DNI	DNI	DNI	DNI	0 Ohm	DNI
R29221	DNI	DNI	DNI	DNI	DNI	DNI	DNI	DNI	DNI	DNI	DNI	DNI	DNI	DNI	0 Ohm

Added for EU_Global

Dual Nano SIM

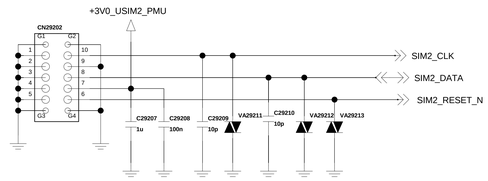

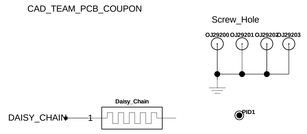

LGE Internal Use Only

LG Electronics
TITLE: MODEL NAME
SIZE: A2 | DWG NO: PDM NUMBER | REV: Rev
Drawn by: User Name | SHEET 1 OF 2 | Date: Drawing Date